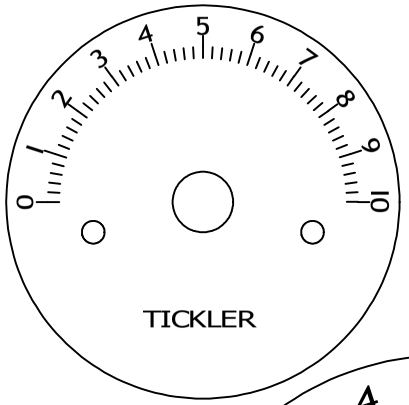
0
1
2
3
4
5
6
7
8
9
10
TICKLER

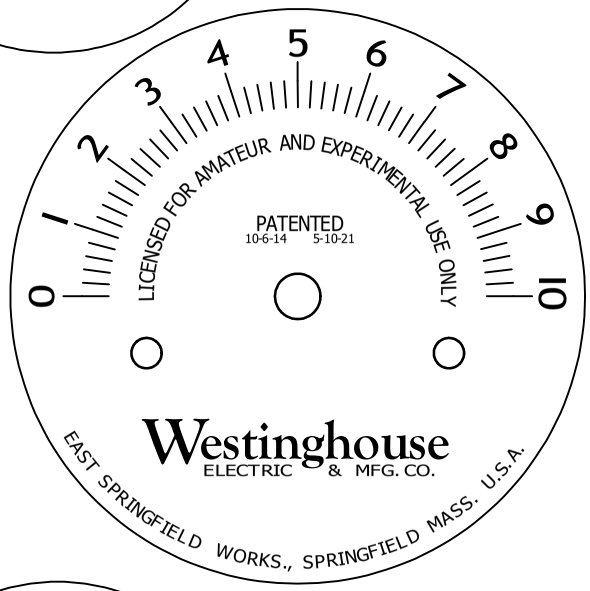
0
1
2
3
4
5
6
7
8
9
10
LICENSED FOR AMATEUR AND EXPERIMENTAL USE ONLY
PATENTED
10-6-14 5-10-21
Westinghouse
ELECTRIC & MFG. CO.
EAST SPRINGFIELD WORKS., SPRINGFIELD MASS. U.S.A.

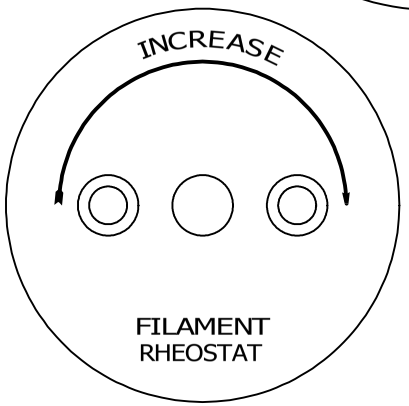
INCREASE
FILAMENT
RHEOSTAT