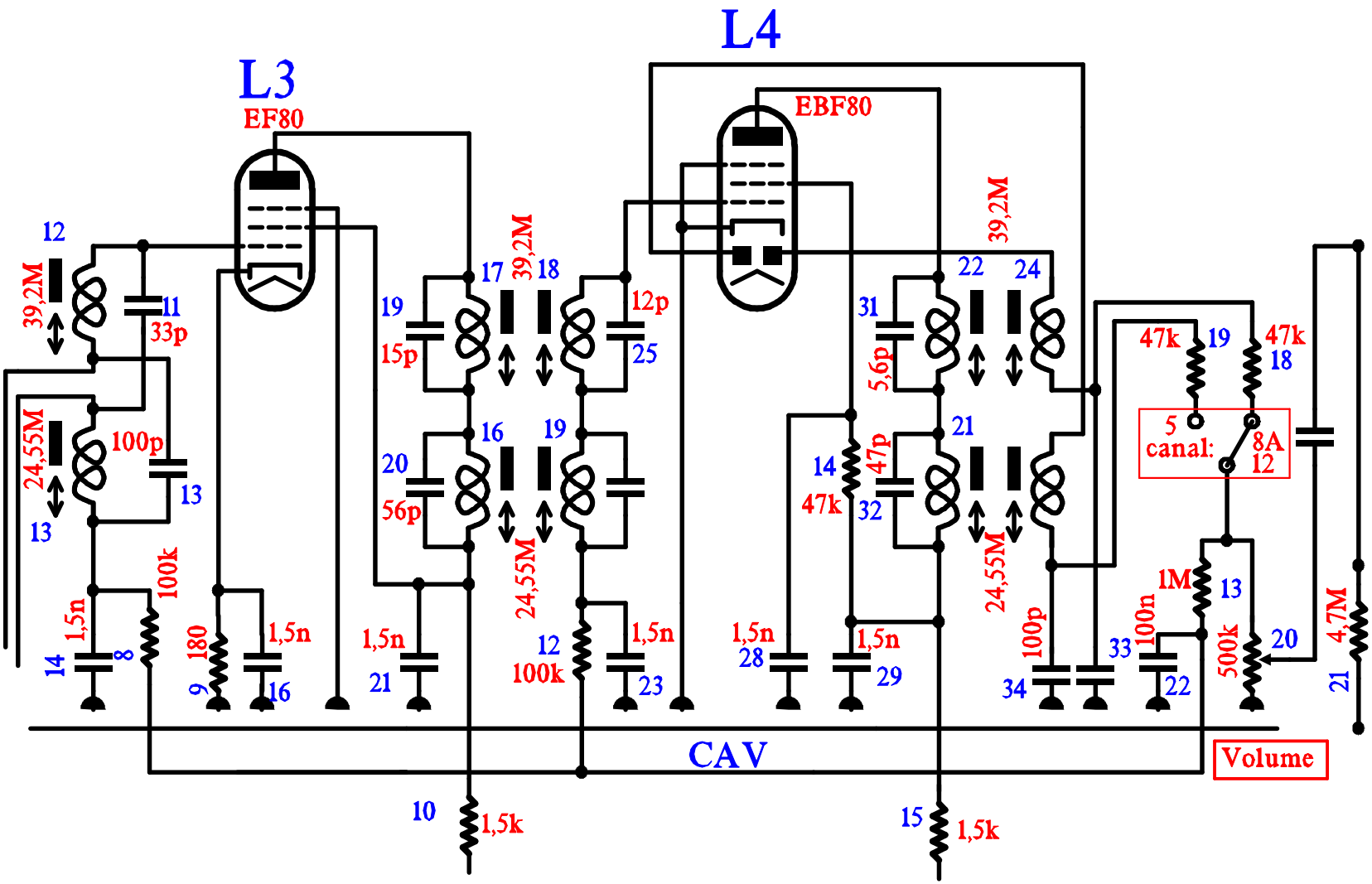
L3
EF80
L4
EBF80
12
39,2M
11
33p
24,55M
100p
13
13
100k
1,5n
14
8
180
9
1,5n
16
1,5n
21
19
15p
20
56p
17
39,2M
18
16
19
24,55M
12p
25
12
100k
1,5n
23
39,2M
31
5,6p
22
24
21
14
47k
47p
32
24,55M
1,5n
28
1,5n
29
100p
34
33
100n
22
47k
19
47k
18
5
canal:
8A
12
1M
13
500k
20
4,7M
21
CAV
Volume
10
1,5k
15
1,5k